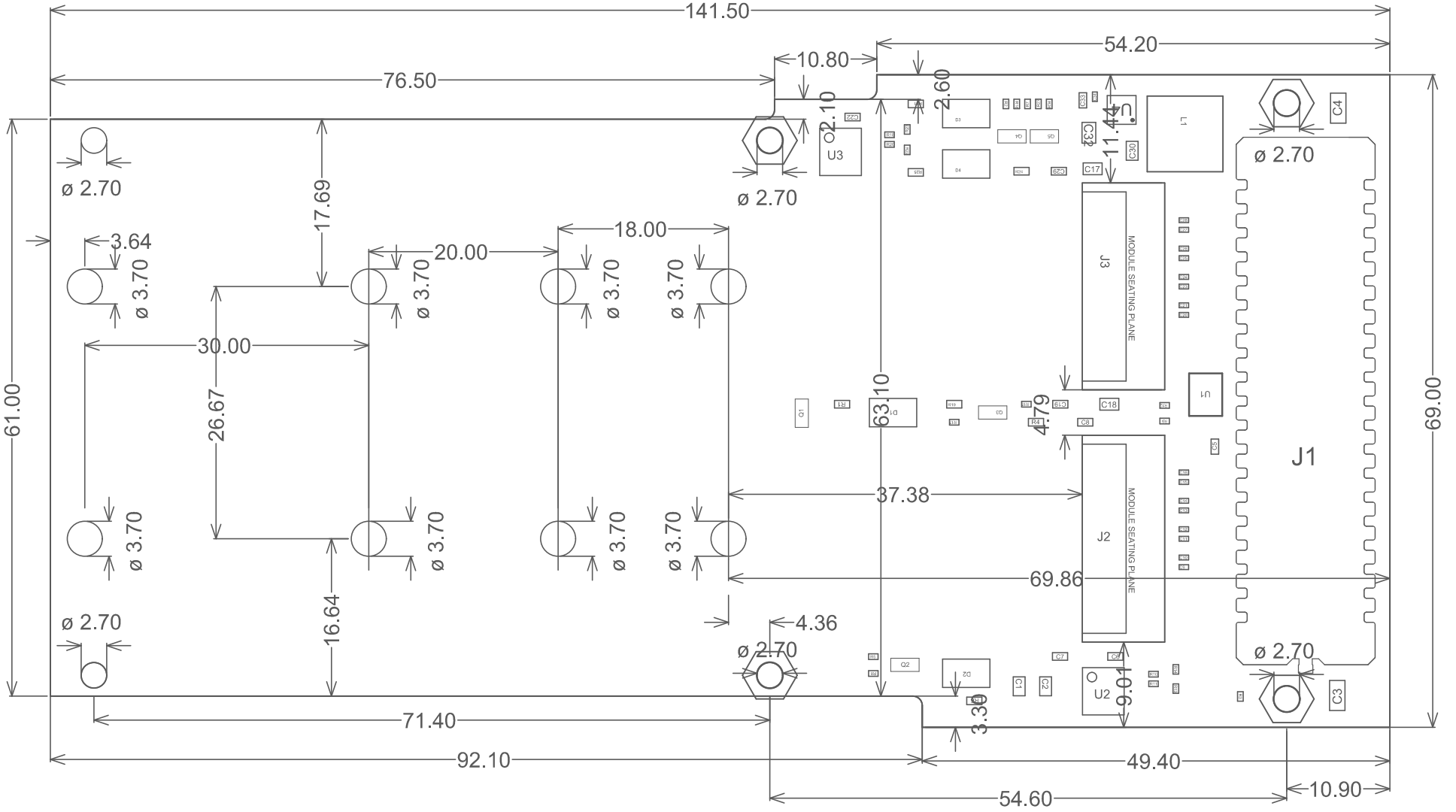
141.50
54.20
10.80
76.50
2.60
2.10
11.44
ø 2.70
ø 2.70
ø 2.70
17.69
3.64
ø 3.70
20.00
18.00
ø 3.70
ø 3.70
ø 3.70
30.00
26.67
61.00
63.10
4.79
37.38
69.86
69.00
J1
J3
J2
MODULE SEATING PLANE
MODULE SEATING PLANE
ø 3.70
ø 3.70
ø 3.70
ø 3.70
ø 2.70
16.64
4.36
ø 2.70
ø 2.70
9.01
3.30
71.40
92.10
49.40
54.60
10.90
U3
U2
C4
C3
L1
C32
C30
C17
C18
C8
C19
C7
C1
C2
D2
D3
D4
D5
Q1
Q2
R1
R4
R19
C22
C29
C33
C35

141.50
54.20
10.80
76.50
2.00
2.10
44.11
ø 2.70
ø 2.70
ø 2.70
17.69
18.00
20.00
3.64
ø 3.70
ø 3.70
ø 3.70
ø 3.70
30.00
61.00
26.92
37.38
67.4
69.86
46.91
4.36
ø 2.70
ø 2.70
ø 2.70
ø 2.70
10.6
3.30
71.40
92.10
49.40
10.90
54.60
66.00